WORKSPACE 48

Agile

Installation Guide - Electric 2 Column Left Hand Return For Single & Double Desk

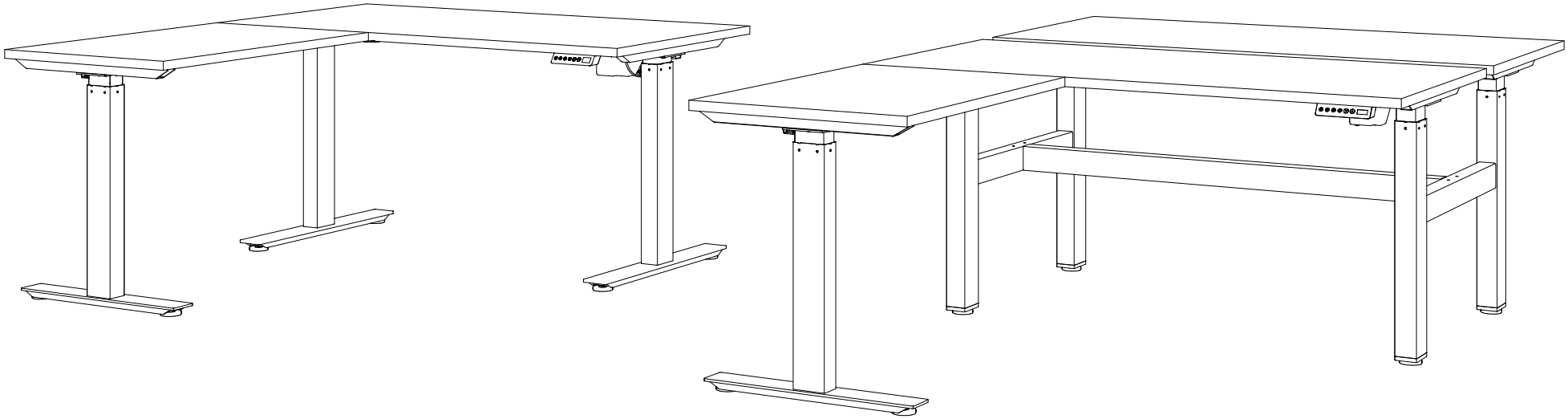

www.workspace48.com

Agile

Installation Guide - Electric 2 Column Left Hand Return For Single & Double Desk

Parts:

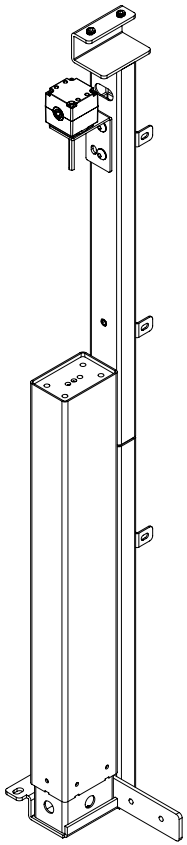

1 x Return Leg

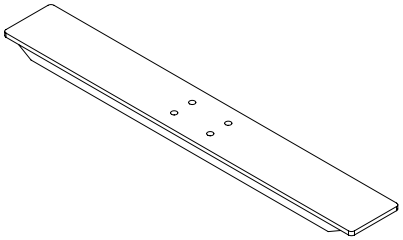

1 x Foot

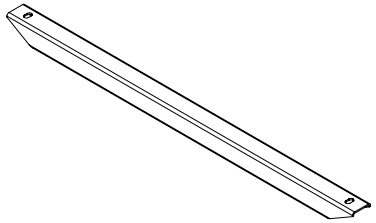

1 x Support Bar

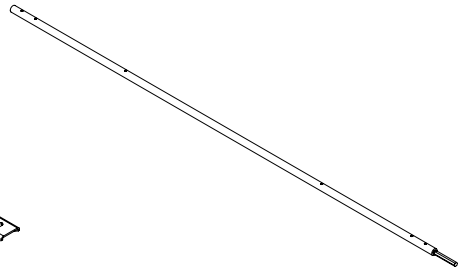

1 x Drive Bar

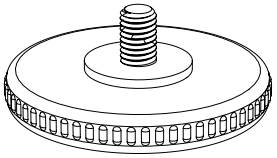

2 x Levelling Foot

4 x M8x25

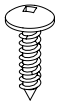

5 x ST5x23

4 x M8x10

Agile

Installation Guide - Electric 2 Column Left Hand Return For Single & Double Desk

Step 1

2 x M8x10

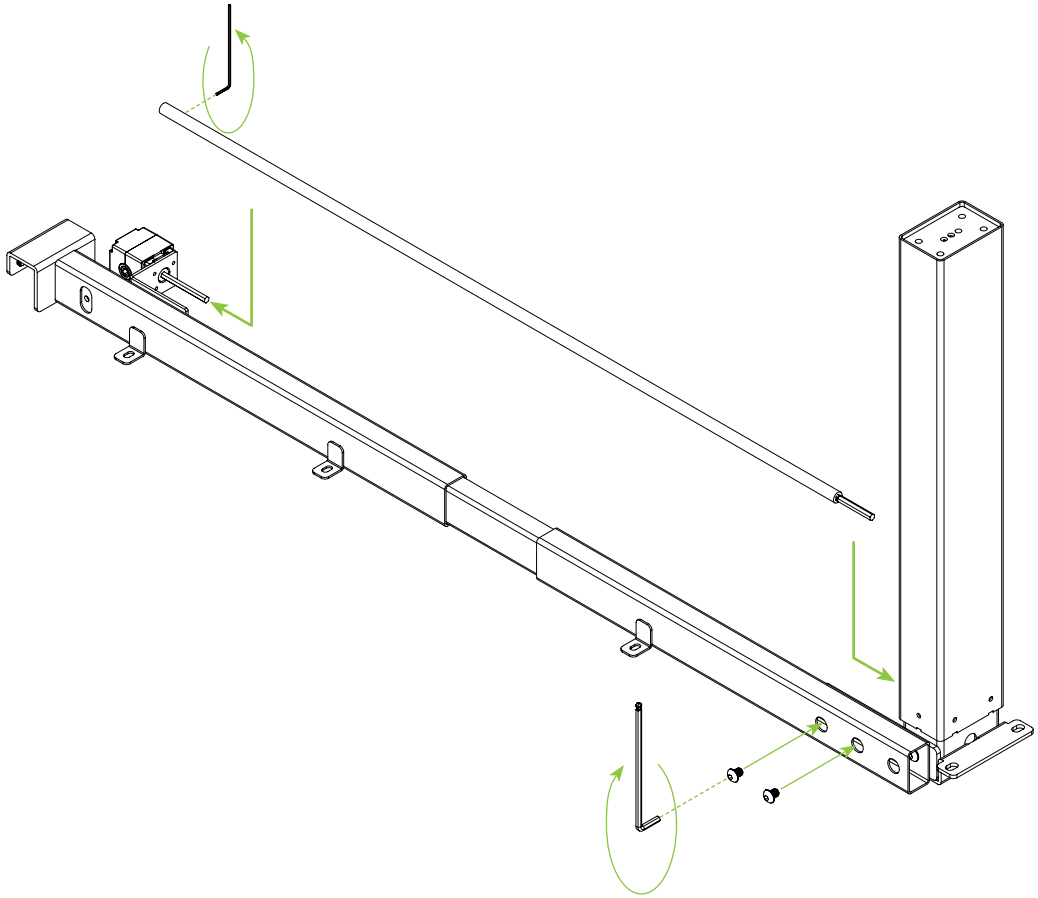

Agile

Installation Guide - Electric 2 Column Left Hand Return For Single & Double Desk

Step 2

2 x M8x10

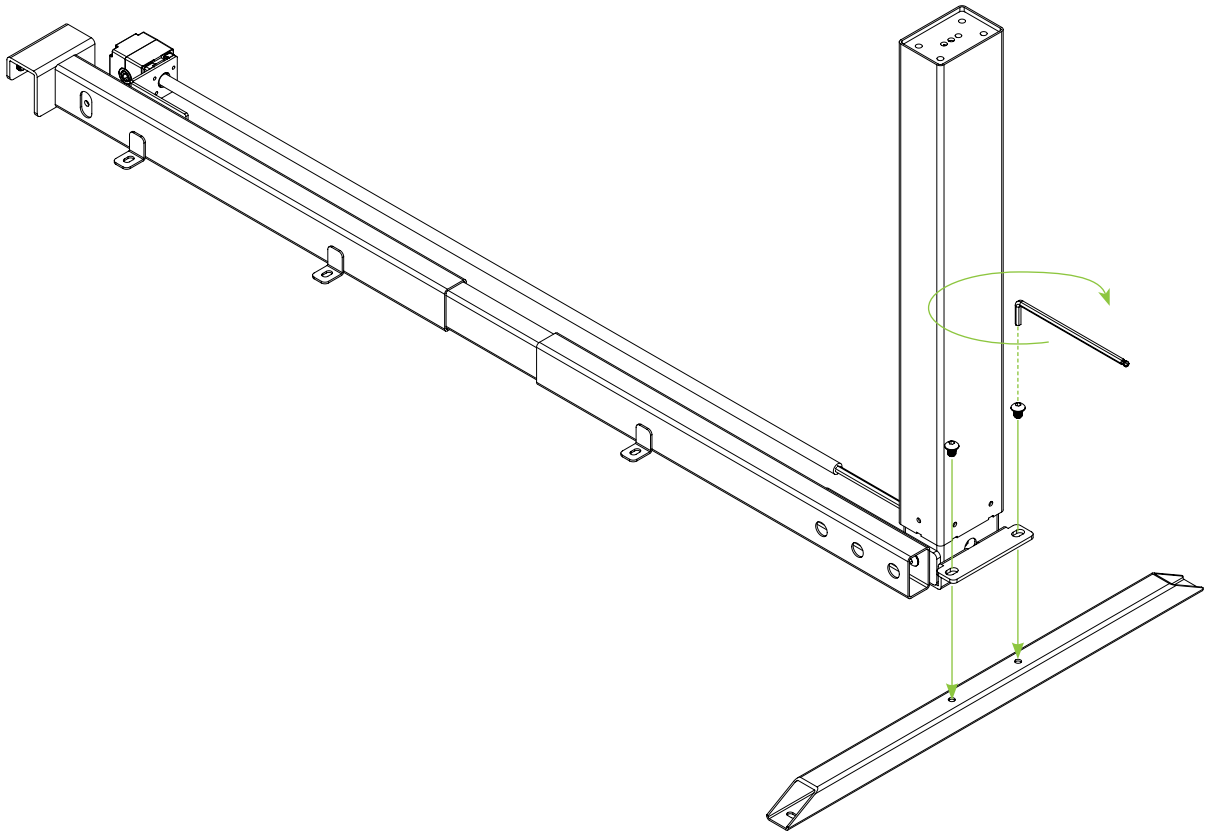

Agile

Installation Guide - Electric 2 Column Left Hand Return For Single & Double Desk

Step 3

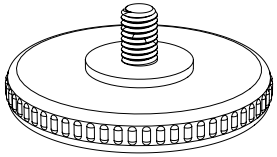

2 x Levelling Foot

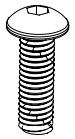

4 x M8x25

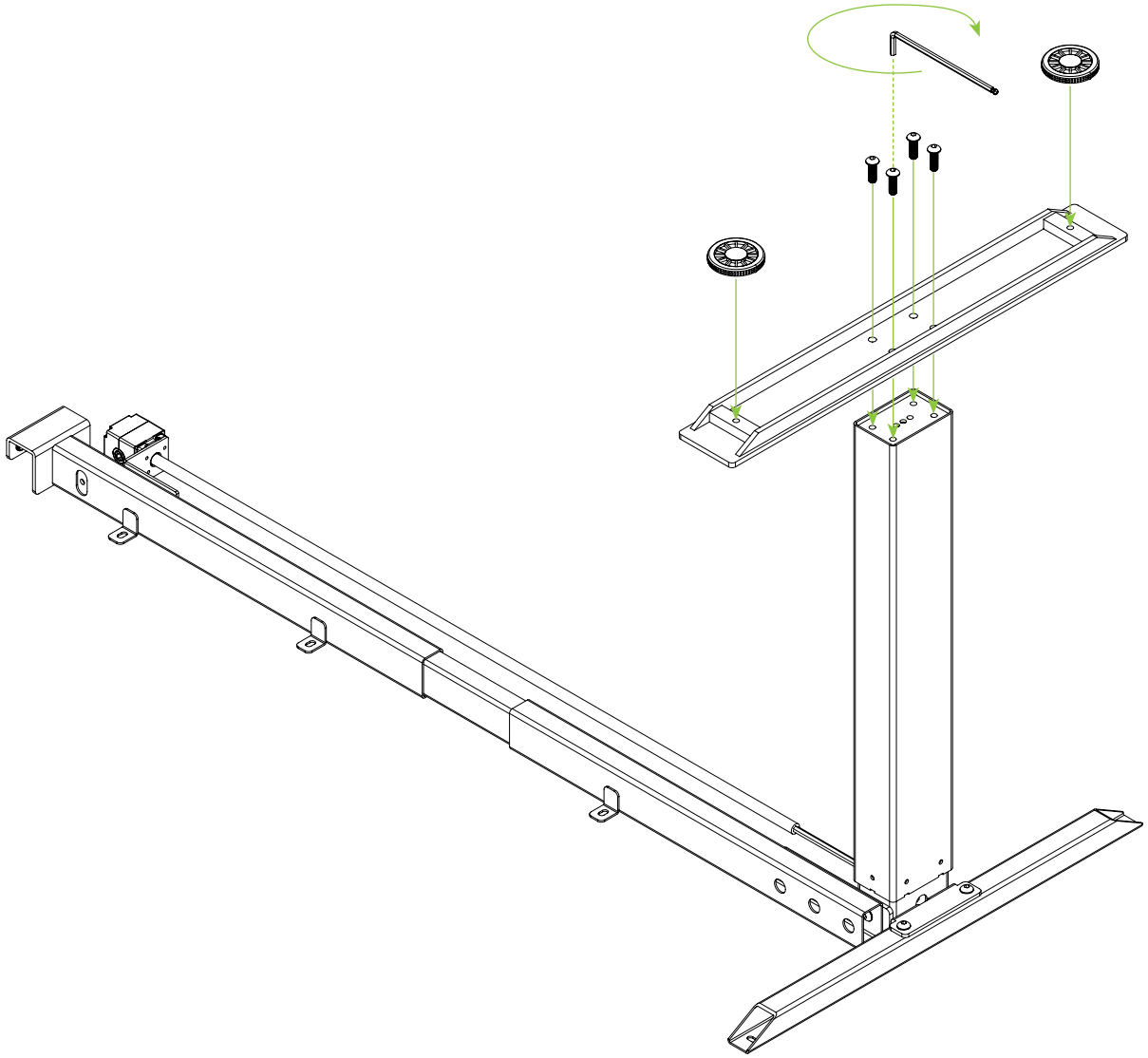

Agile

Installation Guide - Electric 2 Column Left Hand Return For Single & Double Desk

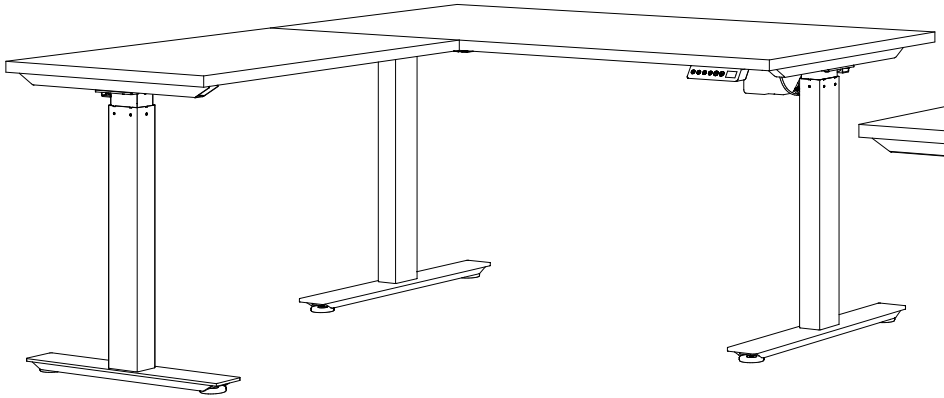

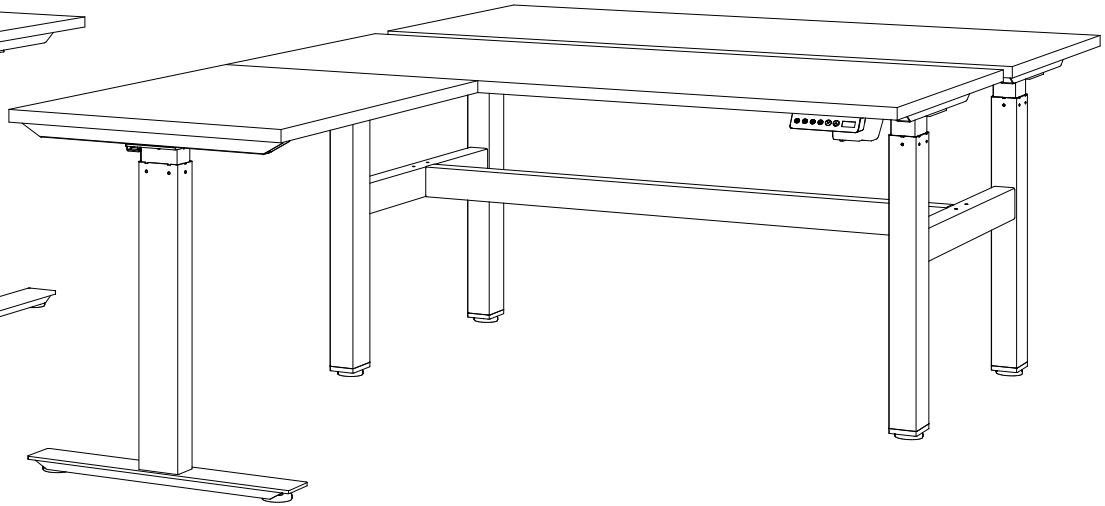

Option 1 - Electric 2 Column Left Hand Return for Single Desk

Go to page 7

Option 2 - Electric 2 Column Left Hand Return for Double Desk

Go to page 11

Agile

Installation Guide - Electric 2 Column Left Hand Return For Single & Double Desk

Option 1: Single Desk and Return
Step 4

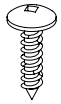

6 x ST5x23

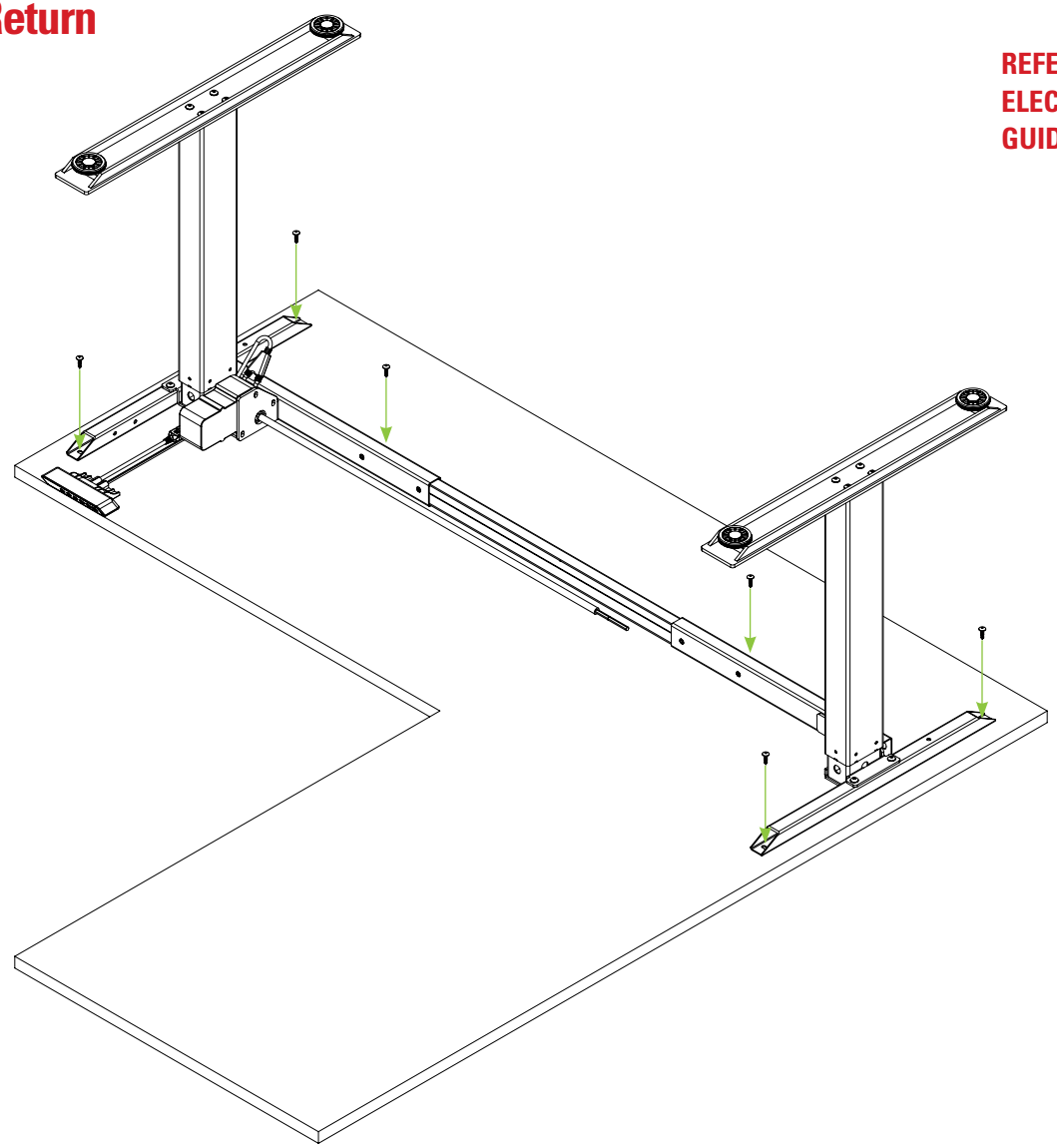

IMPORTANT!

REFER TO SETPS 1-4 OF SINGLE-SIDED ELECTRIC 2 COLUMN DESK INSTALLATION GUIDE TO ASSEMBLE DESK FRAME.

Agile

Installation Guide - Electric 2 Column Left Hand Return For Single & Double Desk

Step 5

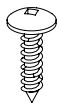

5 x ST5x23

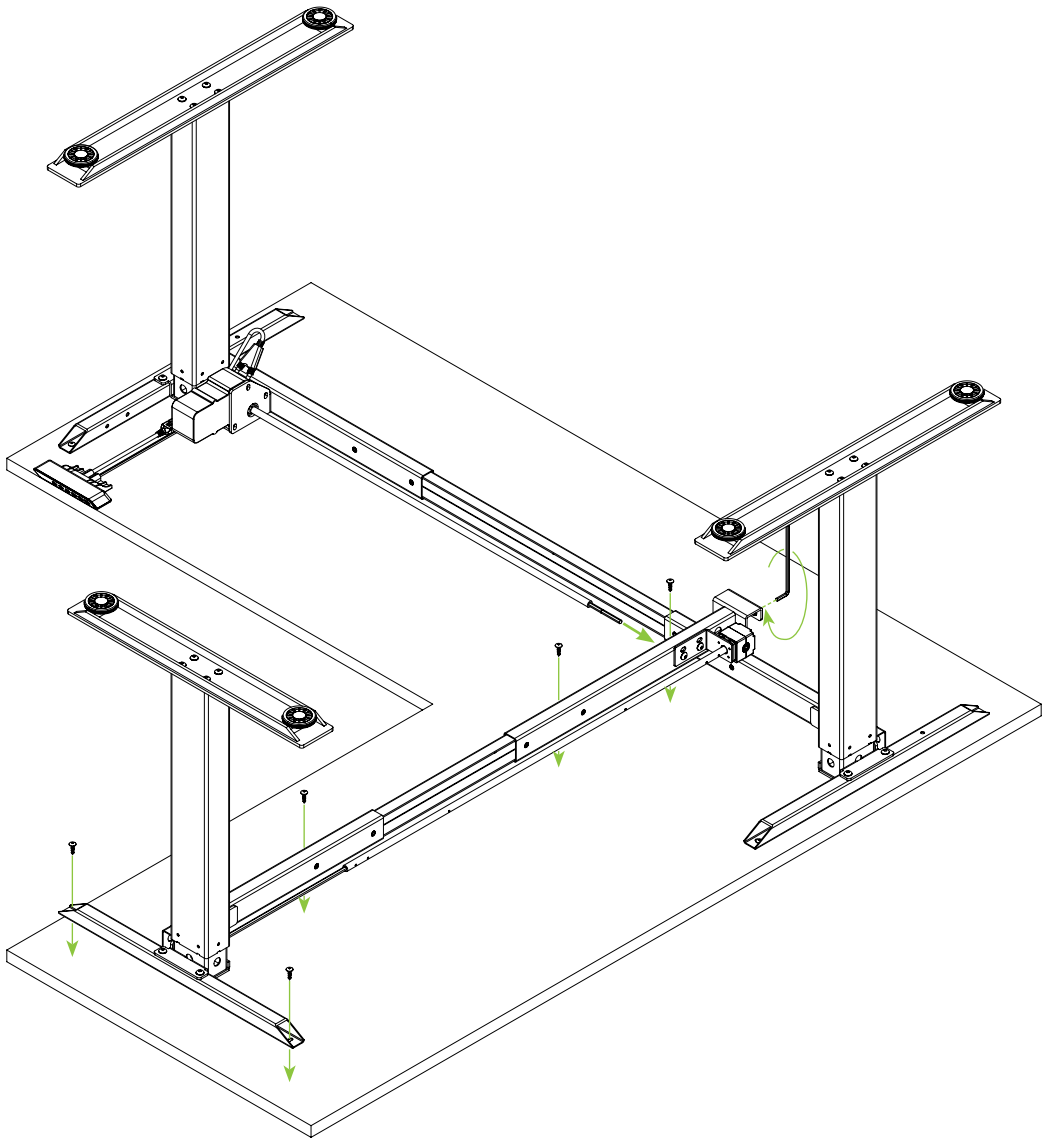

Step 6

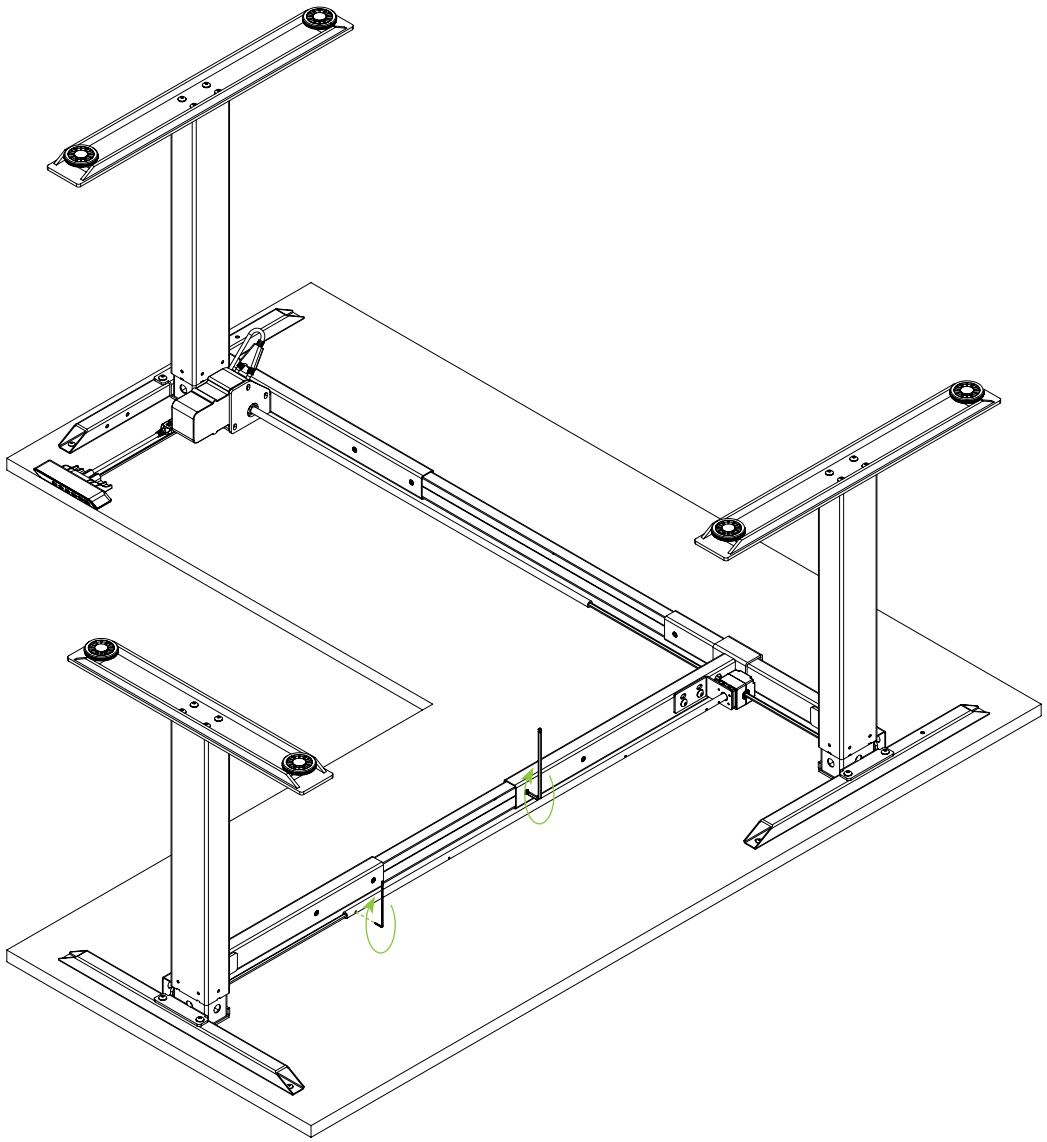

Agile

Installation Guide - Electric 2 Column Left Hand Return For Single & Double Desk

Completed

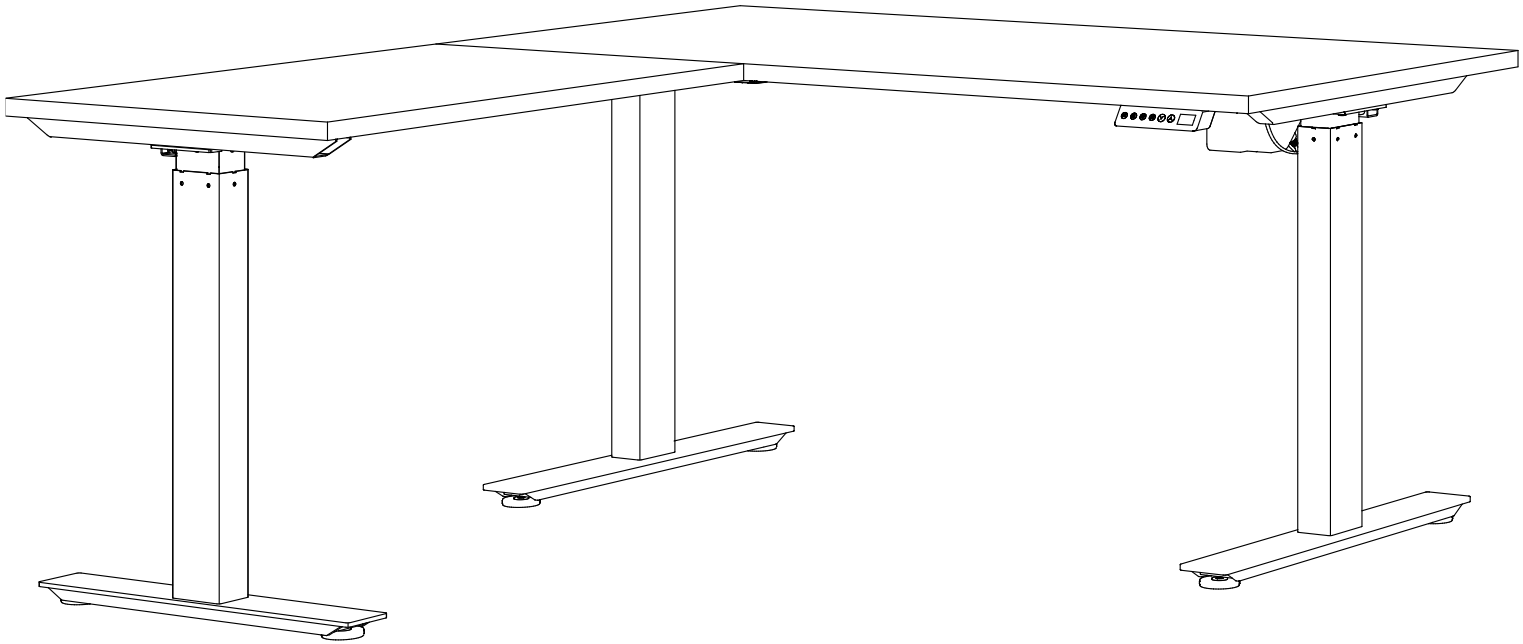

Option 2: Double Desk and Return
Step 4

IMPORTANT!

REFER TO SETPS 1-8 OF DOUBLE-SIDED ELECTRIC 2 COLUMN DESK INSTALLATION GUIDE TO ASSEMBLE DESK FRAME.

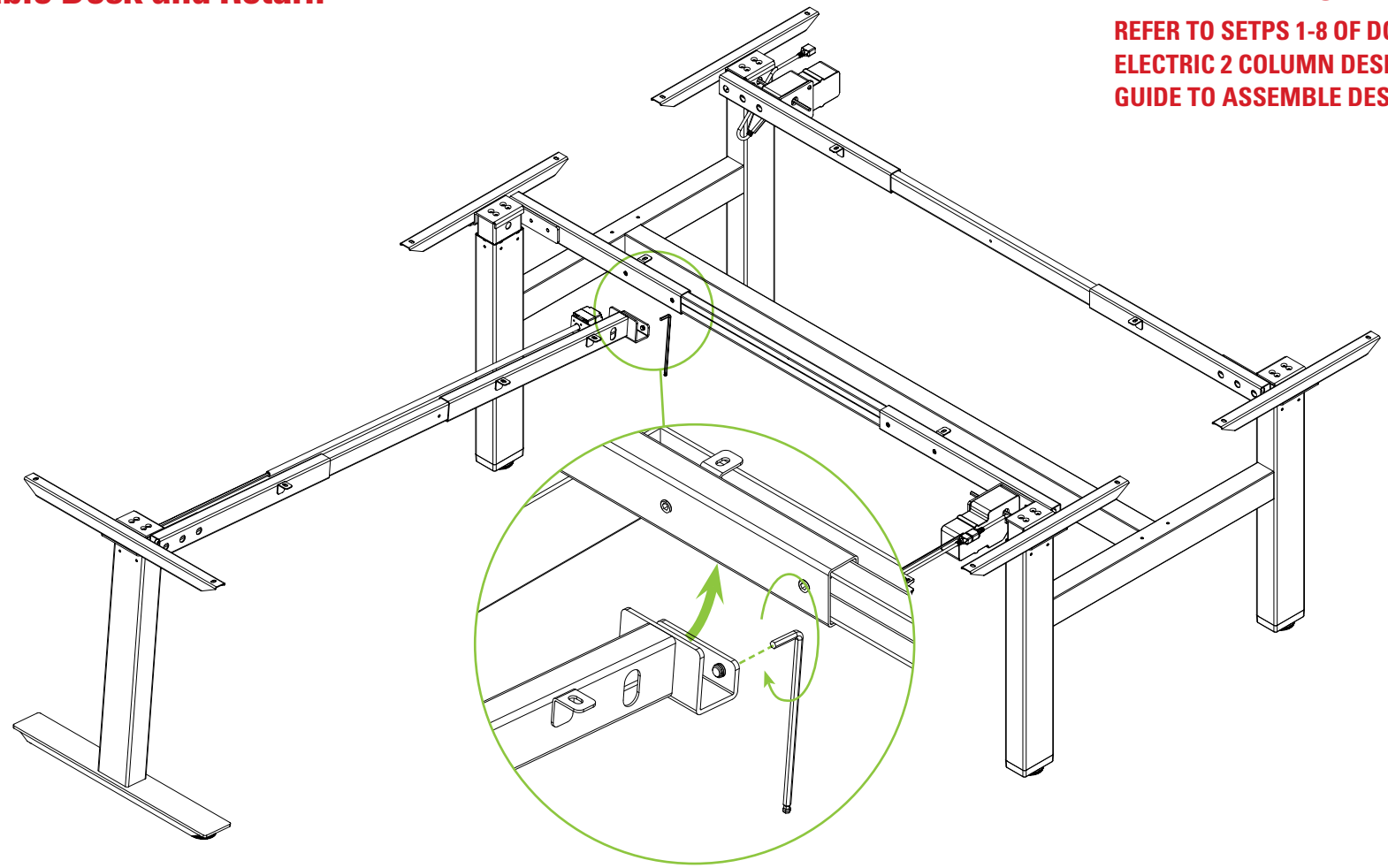

Agile

Installation Guide - Electric 2 Column Left Hand Return For Single & Double Desk

Step 5

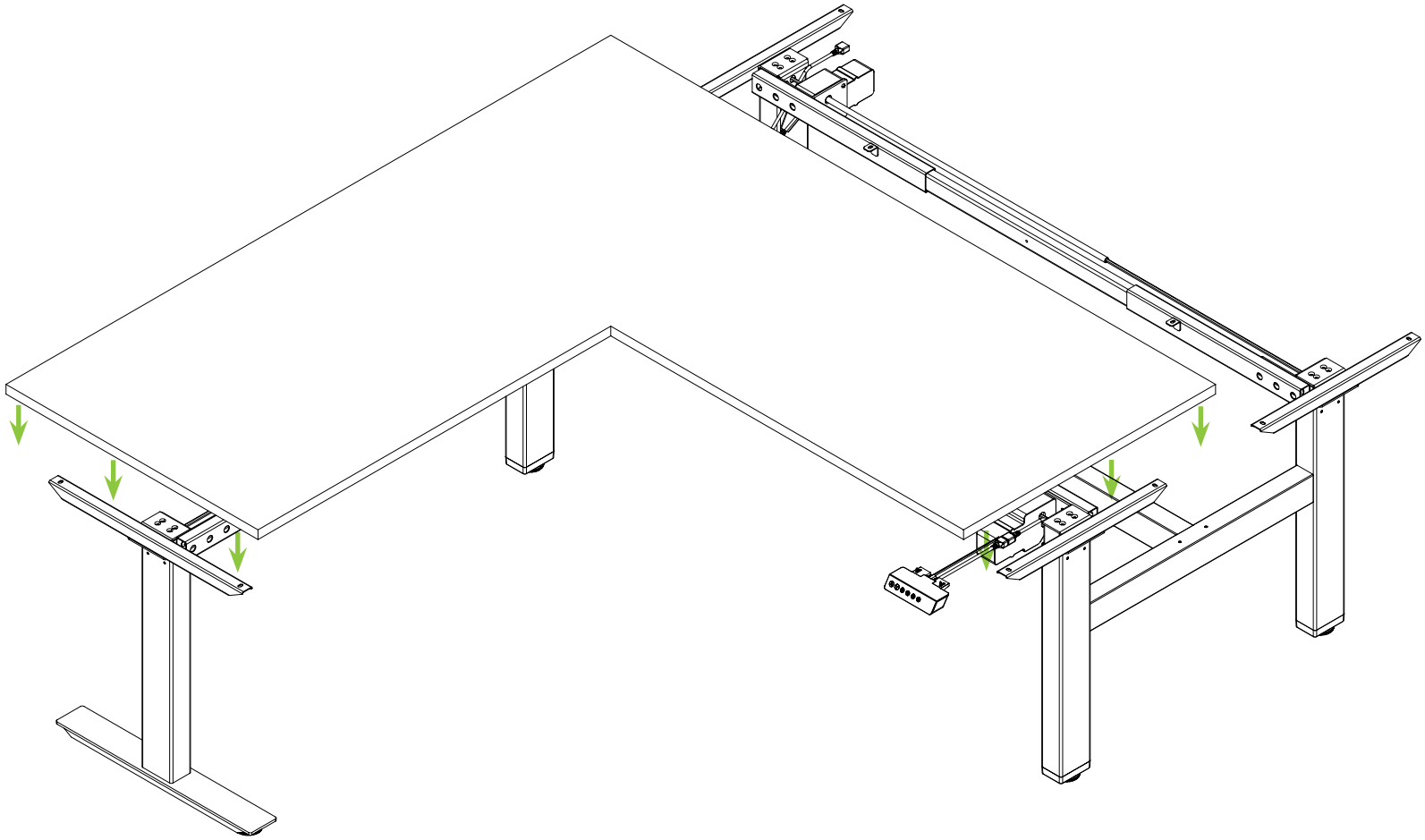

Agile

Installation Guide - Electric 2 Column Left Hand Return For Single & Double Desk

Step 6

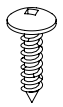

11 x ST5x23

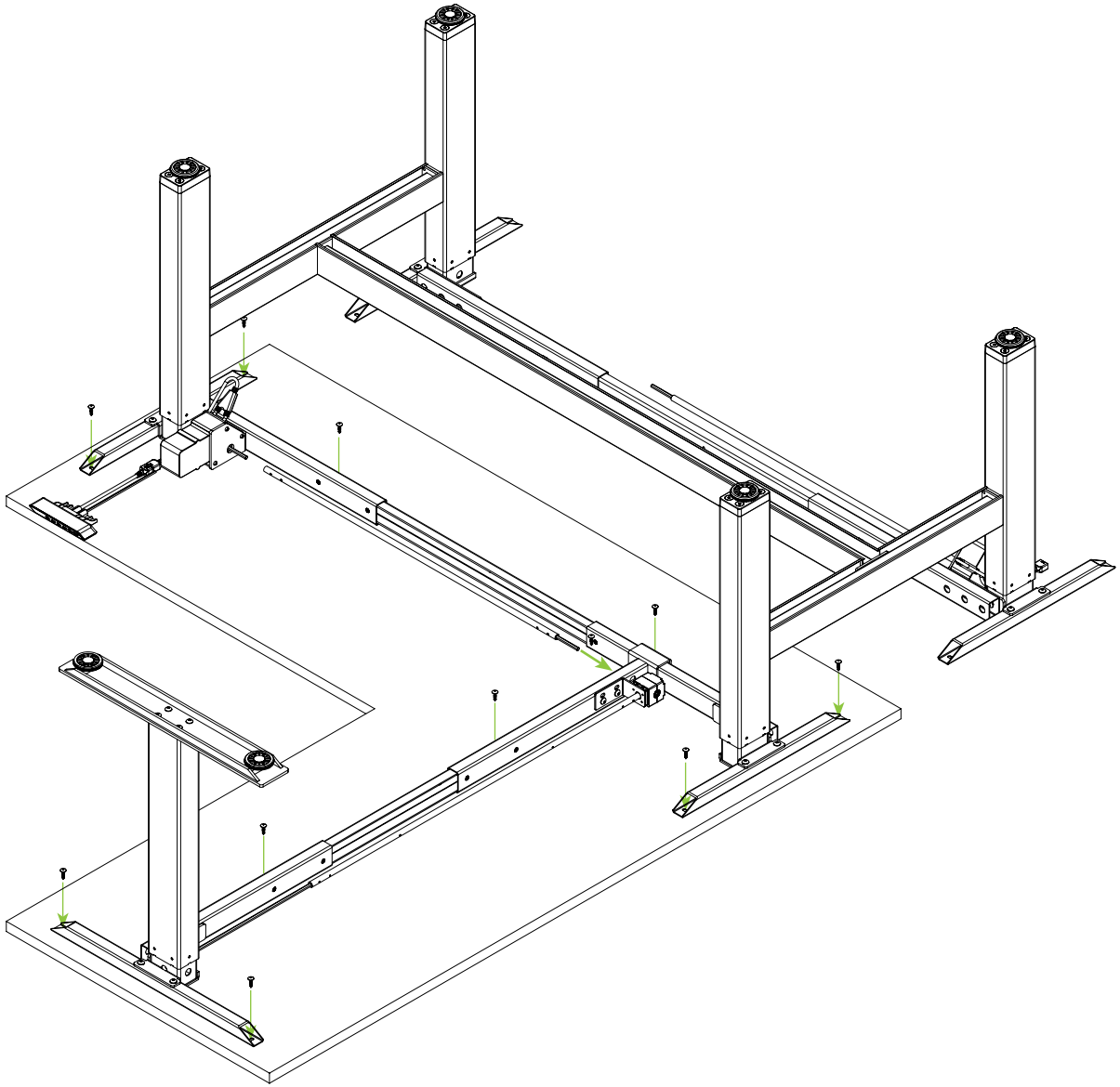

Step 7

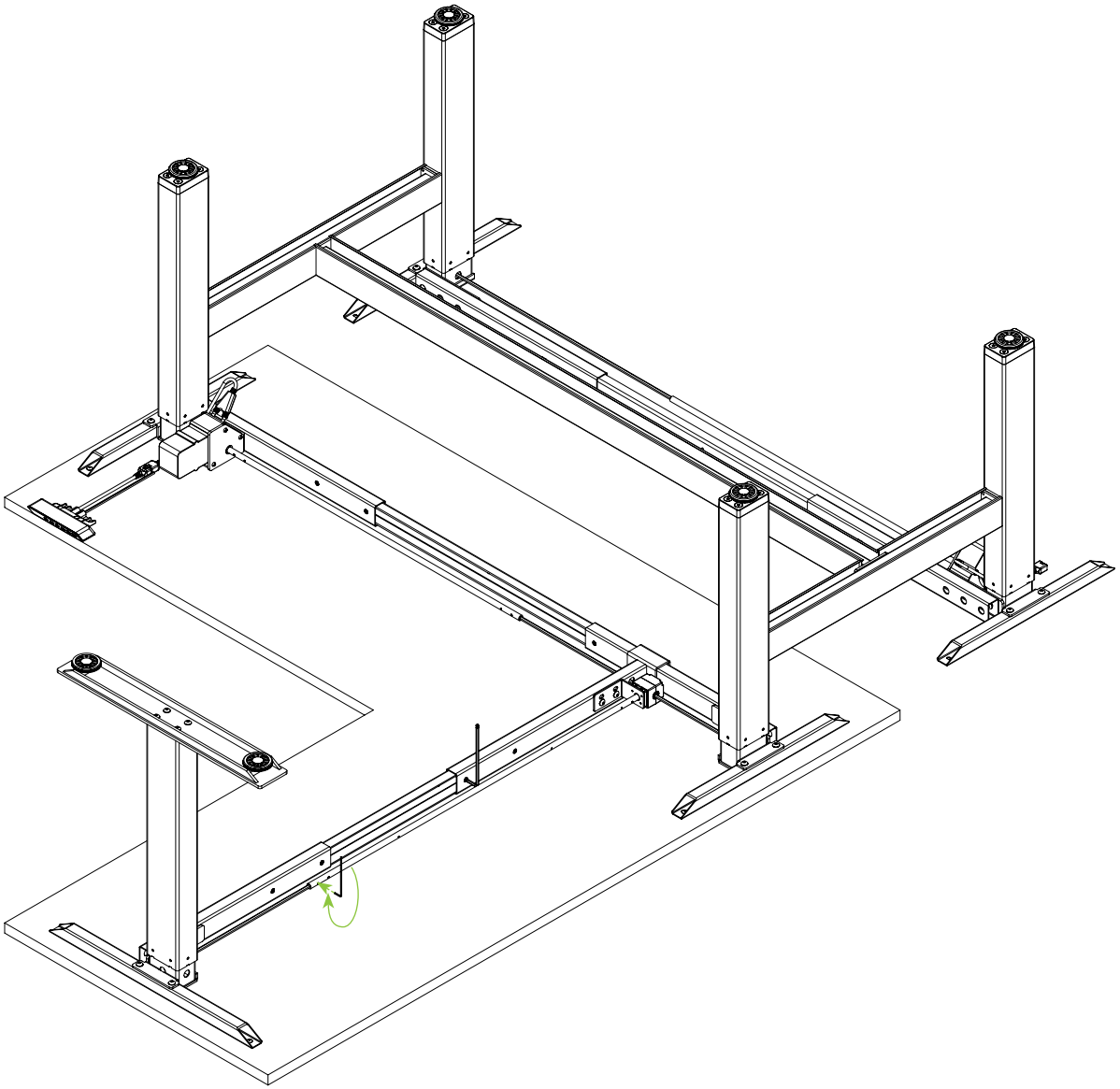

Agile

Installation Guide - Electric 2 Column Left Hand Return For Single & Double Desk
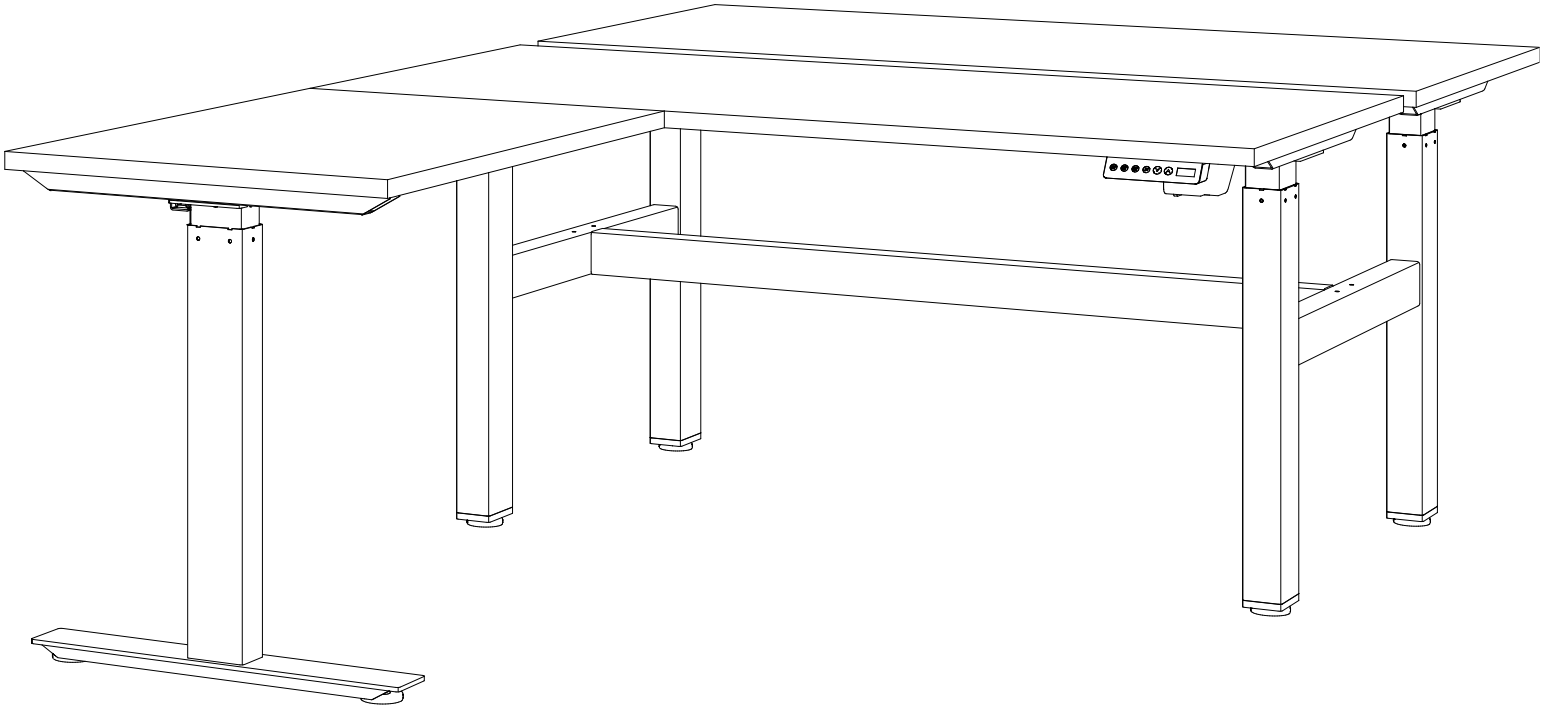
Completed